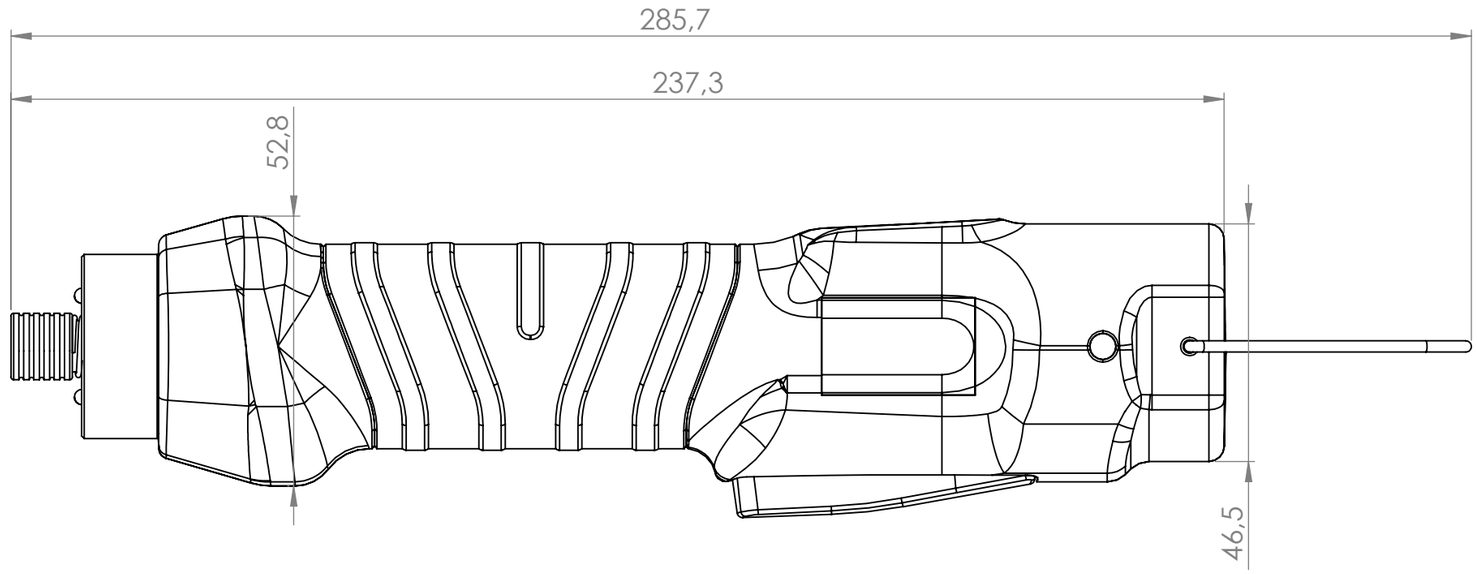


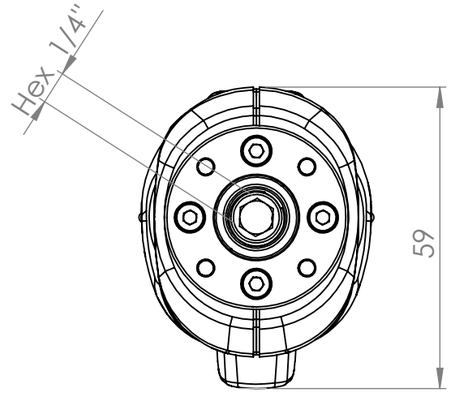


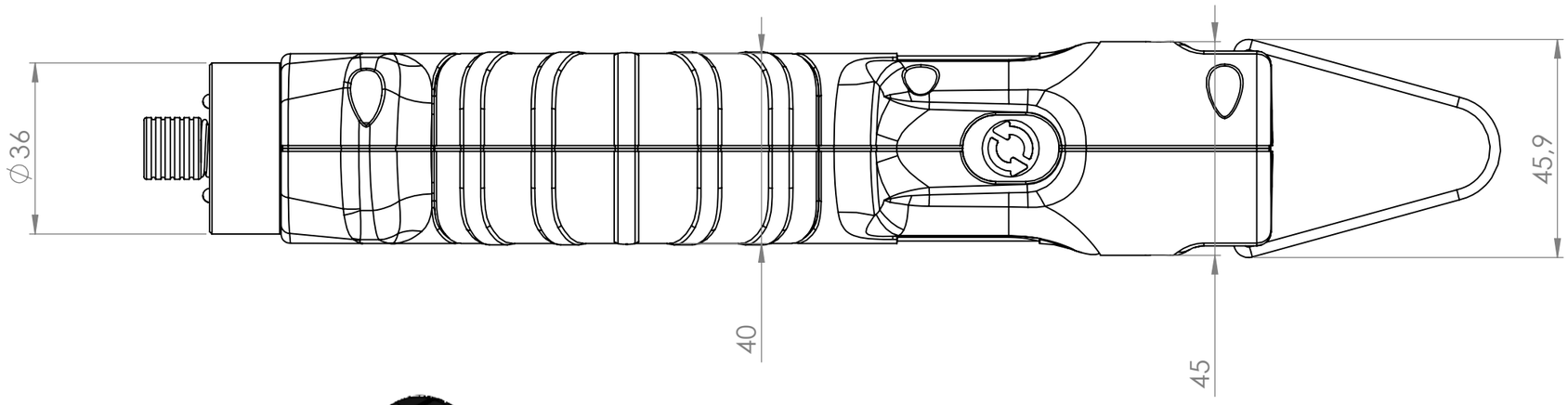

| Tolleranze dove non segnate | | |
|---|---|---|
| Lunghezza | Fino 10mm | ± 0.02mm |
| | Fino 100mm | ± 0.03mm |
| | Fino 300mm | ± 0.1mm |
| | Oltre | ± 1mm |
| Diametro | Fori | H7 |
| | Alberi | h7 |

THE INFORMATION CONTAINED IN THIS DRAWING IS THE SOLE PROPERTY OF KOLVER S.R.L.
ANY REPRODUCTION IN PART OR AS A WHOLE WITHOUT THE WRITTEN PERMISSION OF KOLVER S.R.L. IS PROHIBITED.

| REVISIONE | NOME | FIRMA | DATA |
|---|---|---|---|
| 0 | Zeljko B. | | 09/10/2024 |
| 1 | | | |
| 2 | | | |

**Kolver S.R.L.**

MATERIALE:

Nome: PLUTO/D/TA/LED

Codice: 134203/TA/LED
134206/TA/LED
134211/TA/LED
134216/TA/LED

FORMATO: A3